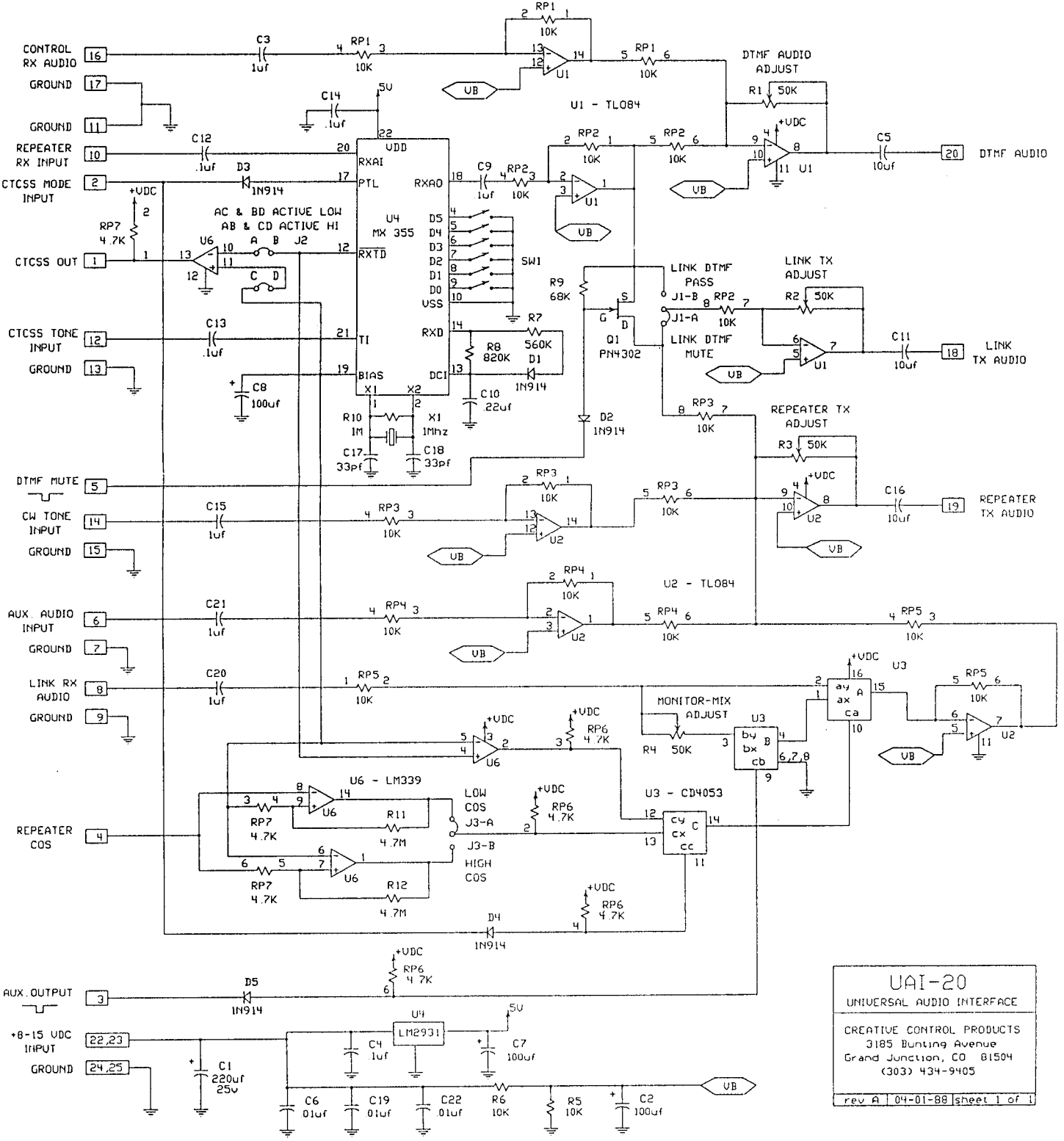
CONTROL RX AUDIO
GROUND
GROUND
REPEATER RX INPUT
CTCSS MODE INPUT
CTCSS OUT
CTCSS TONE INPUT
GROUND
DTMF MUTE
CW TONE INPUT
GROUND
AUX. AUDIO INPUT
GROUND
LINK RX AUDIO
GROUND
REPEATER COS
AUX. OUTPUT
+8-15 VDC INPUT
GROUND
DTMF AUDIO ADJUST
DTMF AUDIO
LINK DTMF PASS
LINK TX ADJUST
LINK DTMF MUTE
LINK TX AUDIO
REPEATER TX ADJUST
REPEATER TX AUDIO
MONITOR-MIX ADJUST
LOW COS J3-A
HIGH COS J3-B
U1 - TL084
U2 - TL084
U6 - LM339
U3 - CD4053
U4 MX 355
AC & BD ACTIVE LOW
AB & CD ACTIVE HI
Q1 PN4302
X1 1Mhz
U4 LM2931
UAI-20
UNIVERSAL AUDIO INTERFACE
CREATIVE CONTROL PRODUCTS
3185 Bunting Avenue
Grand Junction, CO 81504
(303) 434-9405
rev A
04-01-88
sheet 1 of 1