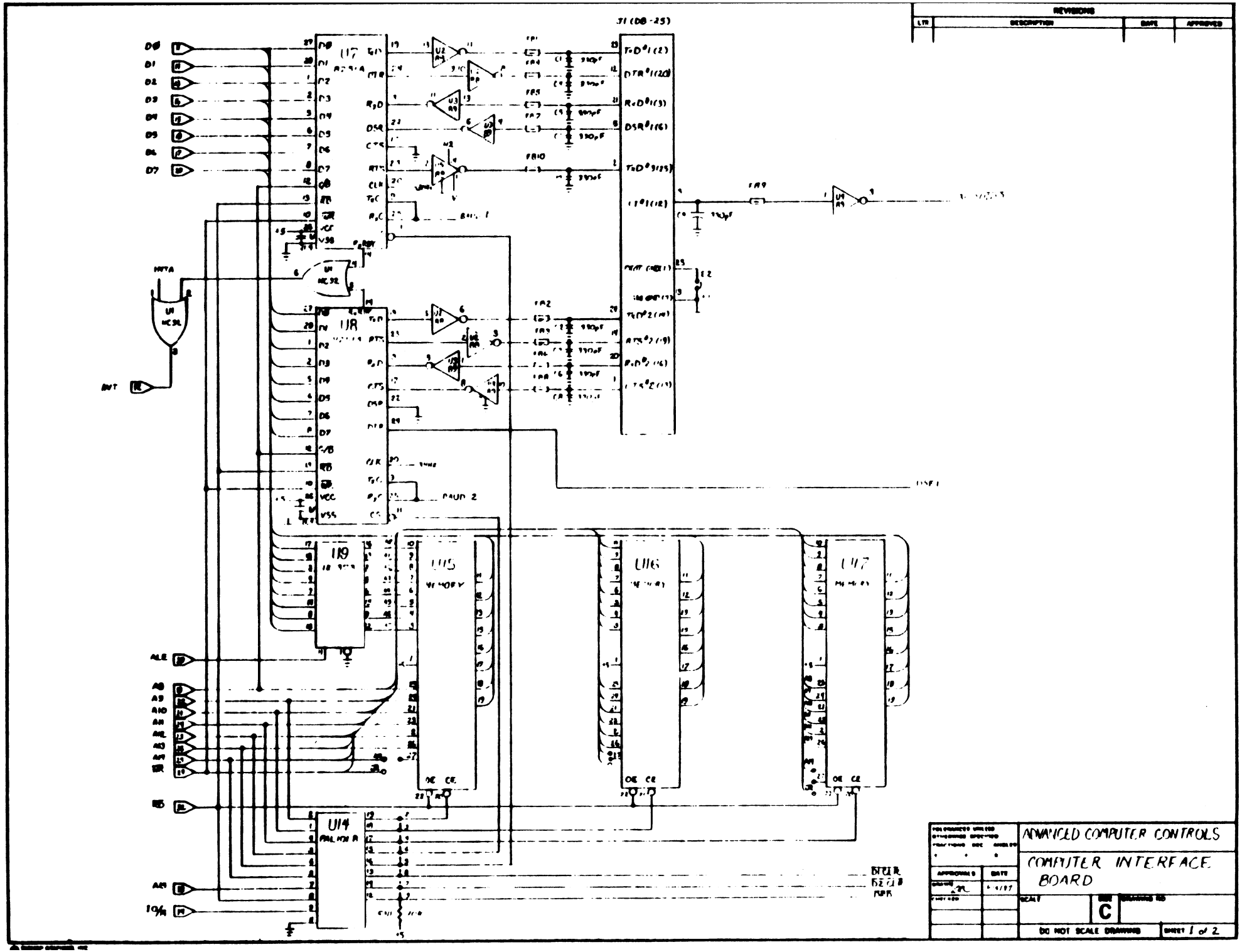
REVISIONS
LTR
DESCRIPTION
DATE
APPROVED
J1 (DB-25)
U7
U8
U9
U14
U15
U16
U17
D0
D1
D2
D3
D4
D5
D6
D7
ALE
A8
A9
A10
A11
A12
A13
A14
A15
RD
A19
IO/M
INTA
INT
BAUD 1
BAUD 2
ADVANCED COMPUTER CONTROLS
COMPUTER INTERFACE BOARD
SCALE
SIZE
C
DRAWING NO
DO NOT SCALE DRAWING
SHEET 1 of 2

REVISIONS			
LTR	DESCRIPTION	DATE	APPROVED

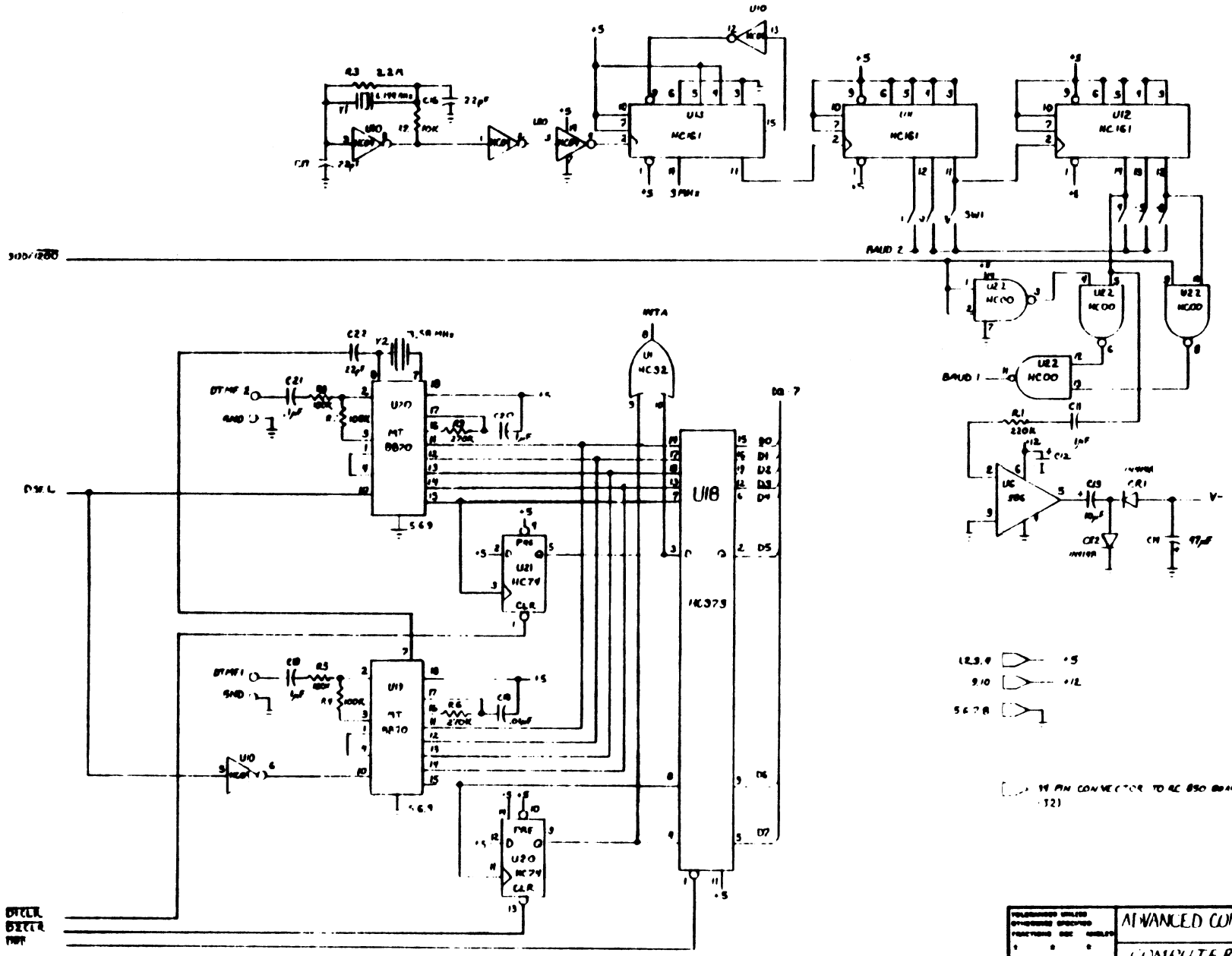

VOLTAGES UNLESS OTHERWISE SPECIFIED	ADVANCED COMPUTER CONTROLS	
FRACTIONS DEC ANGLES	COMPUTER INTERFACE BOARD	
APPROVALS / DATE	SCALE	SIZE C / DRAWING NO
DRAWN	DO NOT SCALE DRAWING	SHEET 2 of 2